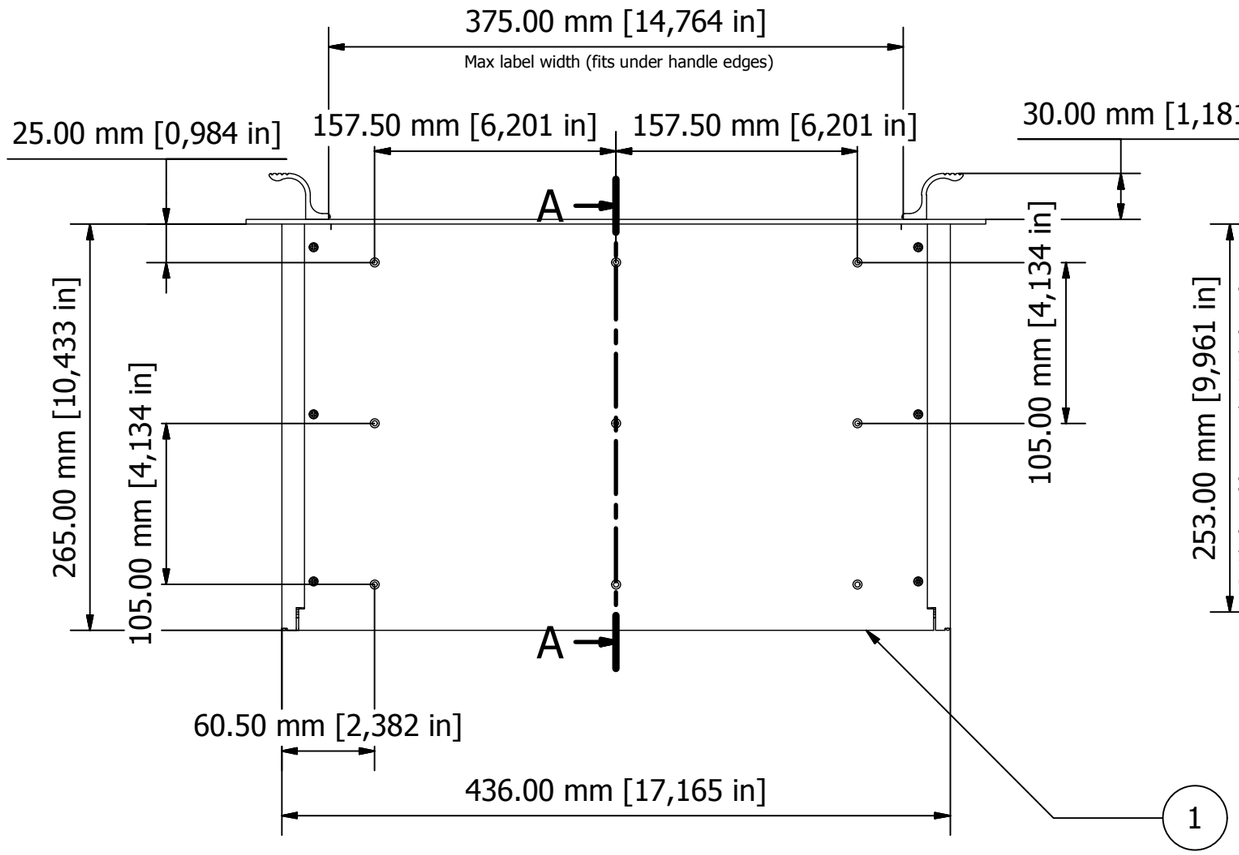

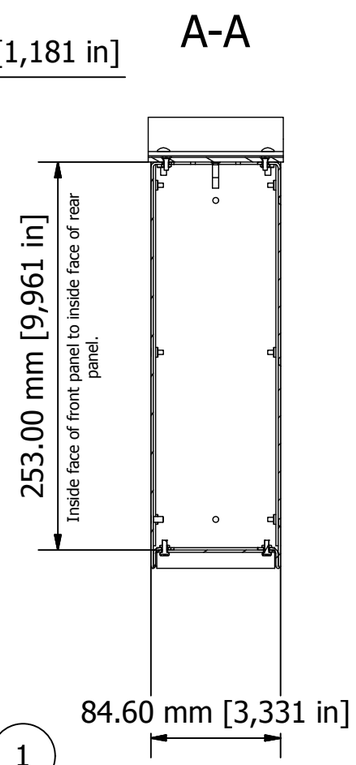

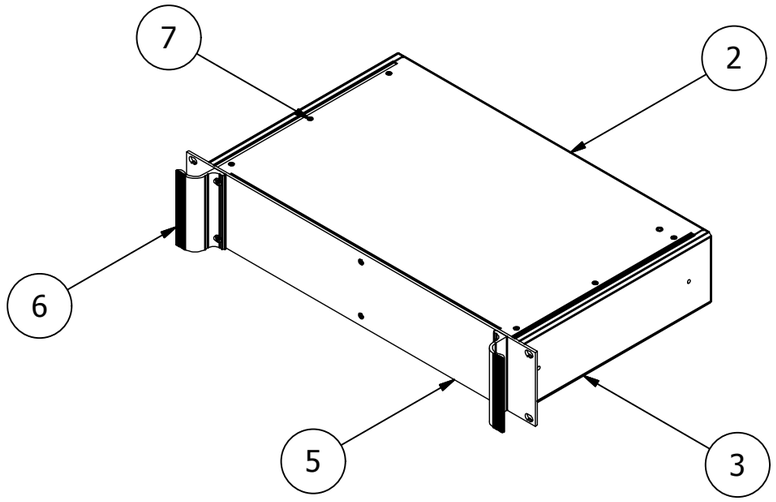

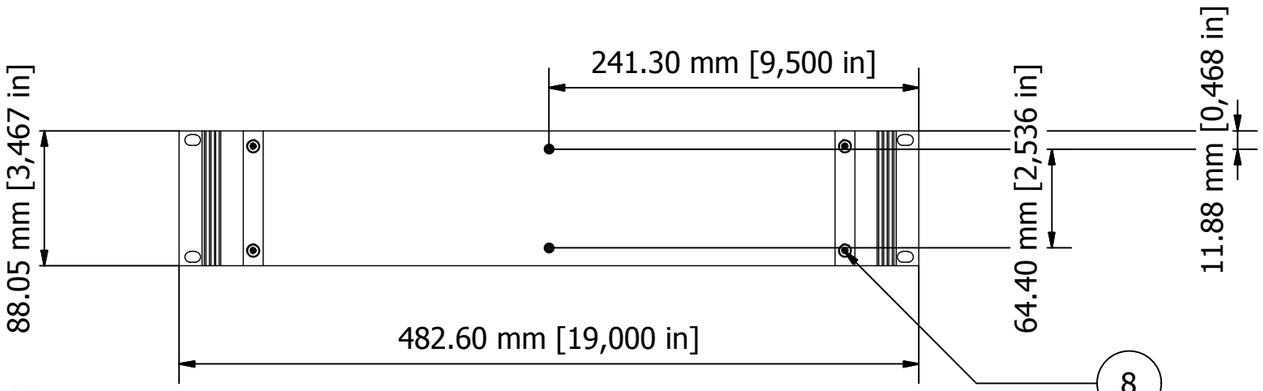

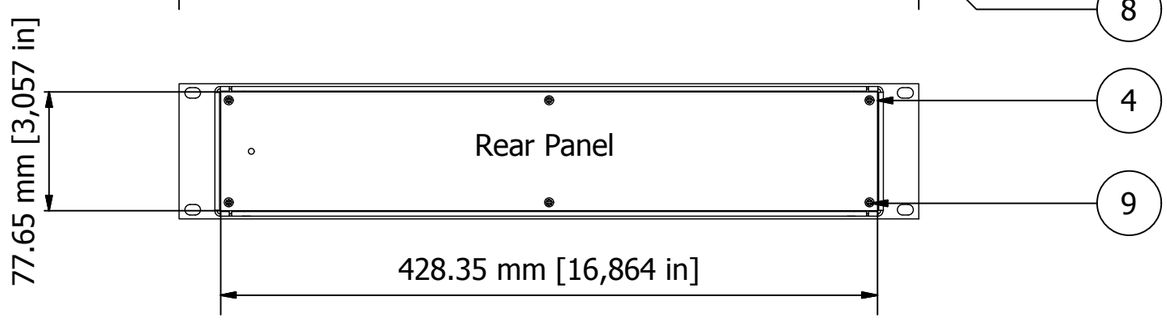

NOTES.
Case metalwork is made from 1.5 mm aluminium and painted RAL 7035 fine texture light grey.
Front panel is made from 3 mm aluminium with a clear etch & anodise finish.
Handles made from an aluminium extrusion & painted RAL 7035 fine texture light grey.
All parts are fitted with M4 studs for earth use.

PARTS LIST

ITEM	QTY	PART NUMBER	DESCRIPTION
1	1	M6203035	Base Panel
2	1	M6203025	Top Panel
3	2	M6202235	Side Panels
4	1	M6201025	Rear Panel
5	1	M6219020	Front Panel
6	2	M6200205	Handles
7	14	M3x8 CSK Screw	Assembly Screws
8	4	M4x16 Screw	Front Panel Screws
9	6	M3x8 Pan Screw	Rear Panel Screws

FIRST ANGLE PROJECTION

Designed by	Description	Date	Scale
L Clark	Combimet 2U x 19" x 265 mm Unvented	01/03/2012	1:4

METCASE ENCLOSURES
15 Brunel Way, Segensworth East, Fareham, Hampshire, UK. PO15 5TX
Tel: +44 (0)1489 583858 Email: metcase@okw.co.uk
METcase www.metcase.com

Part Number	Issue	Sheet
M6219235	1	1 / 1